Epic Fury is Bankrupting Our Economy and Our Morals

A catastrophic failure of foresight in the Middle East is burning through global resources at an unprecedented rate. This is the true price of historical amnesia.

NotebookLM

Striking a Match in a Munitions Dump

Despite the profound fatigue of Ukraine, the devastation in Gaza, and endless proxy conflicts, humanity has ignited another war in the world's most volatile region. The global economy is nervously checking its insurance policy—only to find it has already been invalidated.

NotebookLM

The Billion-Dollar Daily Burn Rate

$1,000,000,000 / Day

According to the Center for Strategic and International Studies (CSIS), the U.S. is spending nearly $1 billion every single day on Operation Epic Fury.

- Scale of Spending: Roughly twice the entire annual GDP of Micronesia.
- Operational Baseline: Running a single U.S. carrier strike group costs $6.5 million per day, with multiple groups currently deployed.

NotebookLM

Swatting Flies with a 22-Carat Gold-Plated Baseball Bat

Iran is forcing the U.S. to deplete its defense budget by deploying highly advanced interceptors against basic, low-cost drone technology.

The Defense

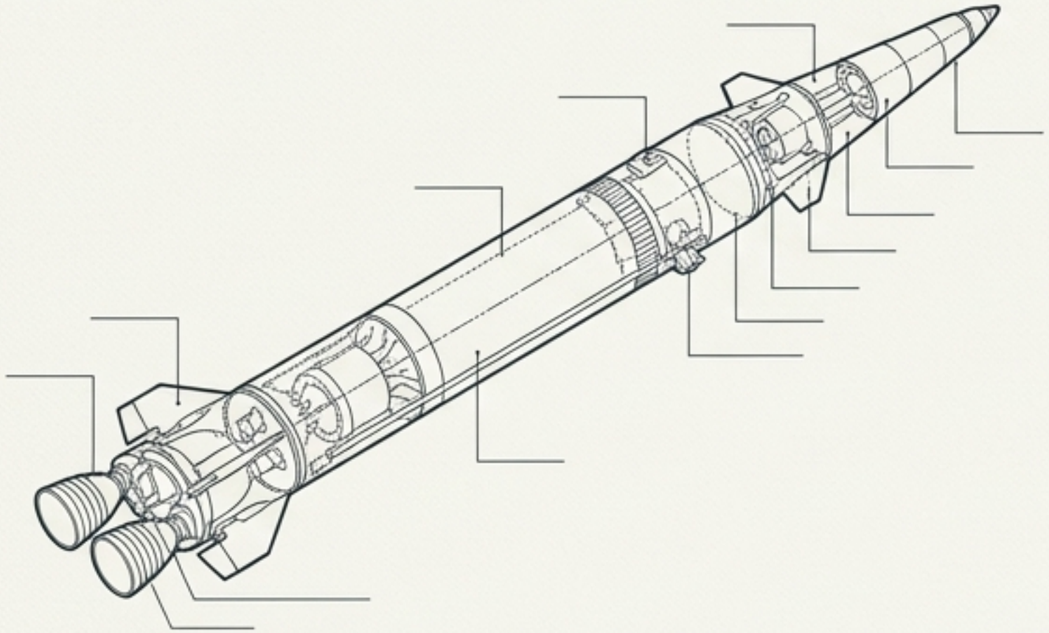

A single THAAD missile costs $15 million.
A Patriot (PAC-3) interceptor costs $4 million.

The Threat

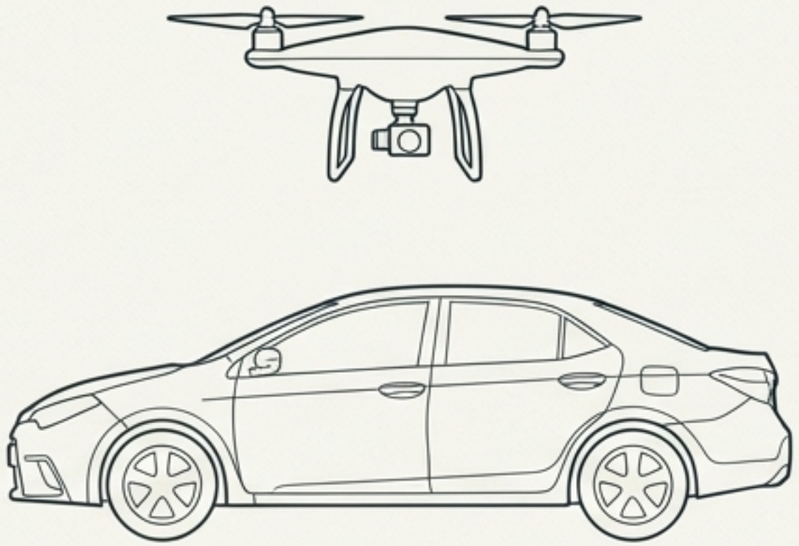

Deployed against offensive drones that cost less to manufacture than a standard Toyota Corolla.

NotebookLM

Billions Up in Smoke in the First 100 Hours

The defense operation alone has resulted in rapid, catastrophic equipment and munitions losses:

- $3.1 Billion worth of missiles fired in just the first 100 hours of the conflict.
- $1.1 Billion lost in a single early warning radar destruction in Qatar.
- $1.4+ Billion in destroyed aerospace assets, including three F-15 fighter jets and multiple MQ-9 Reaper drones.

ITEM:
MUNITIONS FIRED
..... $3,100,000,000

ITEM:
EARLY WARNING RADAR
(QATAR) $1,100,000,000

ITEM:
3X F-15 JETS & MQ-9
REAPERS $1,400,000,000

NotebookLM

A Trillion-Dollar Shockwave to the Global Economy

The ripple effects of Operation Epic Fury have immediately fractured global stability.

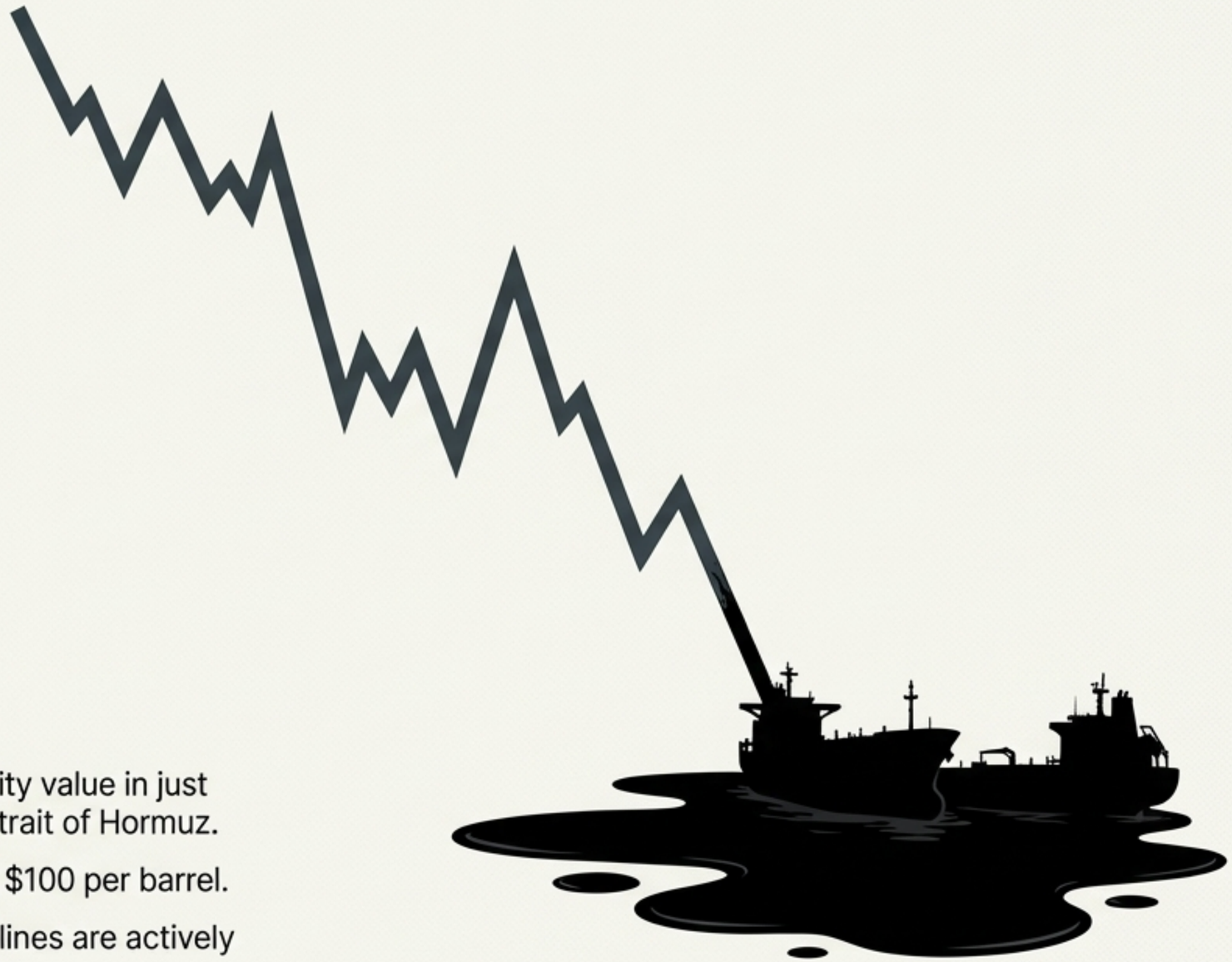

- **Equity Wipeout:** A $3.2 trillion loss in global equity value in just four days following the Iranian blockade of the Strait of Hormuz.
- **Energy Crisis:** Oil prices violently rocketing past $100 per barrel.
- **Trade Paralysis:** Docked ships and grounded airlines are actively hammering businesses and livelihoods worldwide.

NotebookLM

The Ultimate Opportunity Cost

What is $1 Billion actually worth when it isn’t being used to blow things up?

NotebookLM

One Day of War vs. Global Survival

1 Day of Operation Epic Fury ($1B)

The Alternative ($1B)

World Food Programme: 2 billion meals. Enough to feed every single person on Earth currently facing extreme hunger for roughly a week.

World Health Organization: Covers the entire **annual appeal** for global health emergencies. Provides healthcare to 250 million people in conflict zones (Gaza, Sudan, Haiti), sustains 8,000 health facilities, and funds 50 million consultations.

NotebookLM

One Day of War vs. The Future

1 Day of Operation Epic Fury ($1B)

The Alternative ($1B)

Global Partnership for Education (GPE): Puts 40 million children into school for a year (teachers, books, safe classrooms). Note: Just five days of this war ($5B) could transform the education systems of 90 countries for five years.

Gavi, the Vaccine Alliance: Immunizes 40 million children, preventing millions of future deaths from measles, polio, and pneumonia.

NotebookLM

The True Cost is Measured in Lives

Within days of the escalation, the human toll has mounted across all involved nations:

6

U.S. caskets flown home.

12

Israeli civilian fatalities.

~200

killed in bombings across Lebanon.

~10

lives lost in the heavily protected Gulf States (including a Pakistani taxi driver in Dubai killed by falling intercept debris).

NotebookLM

Innocents Erased Without Cause or Consequence

Over **1,300** Iranian civilians have met their end—“freed” by outside intervention.

Among these casualties were **180** schoolgirls, all under the age of twelve, whose lives were snuffed out on the very first day of the strikes.

Whose hands hold the blood of those sent to an early grave in the name of stabilization?

NotebookLM

The Tragic Repetition of History

The United States spent approximately $2 trillion each on its escapades in Iraq and Afghanistan.

The guaranteed return on investment for these interventions:

- Shattered infrastructure and destabilized governments.
- Massive power vacuums.
- The fueling of extremism resulting in the Taliban and ISIS.
- “Mainly what we learn from history is that we do not learn from history.”

NotebookLM

A Region Resolute and Restrained

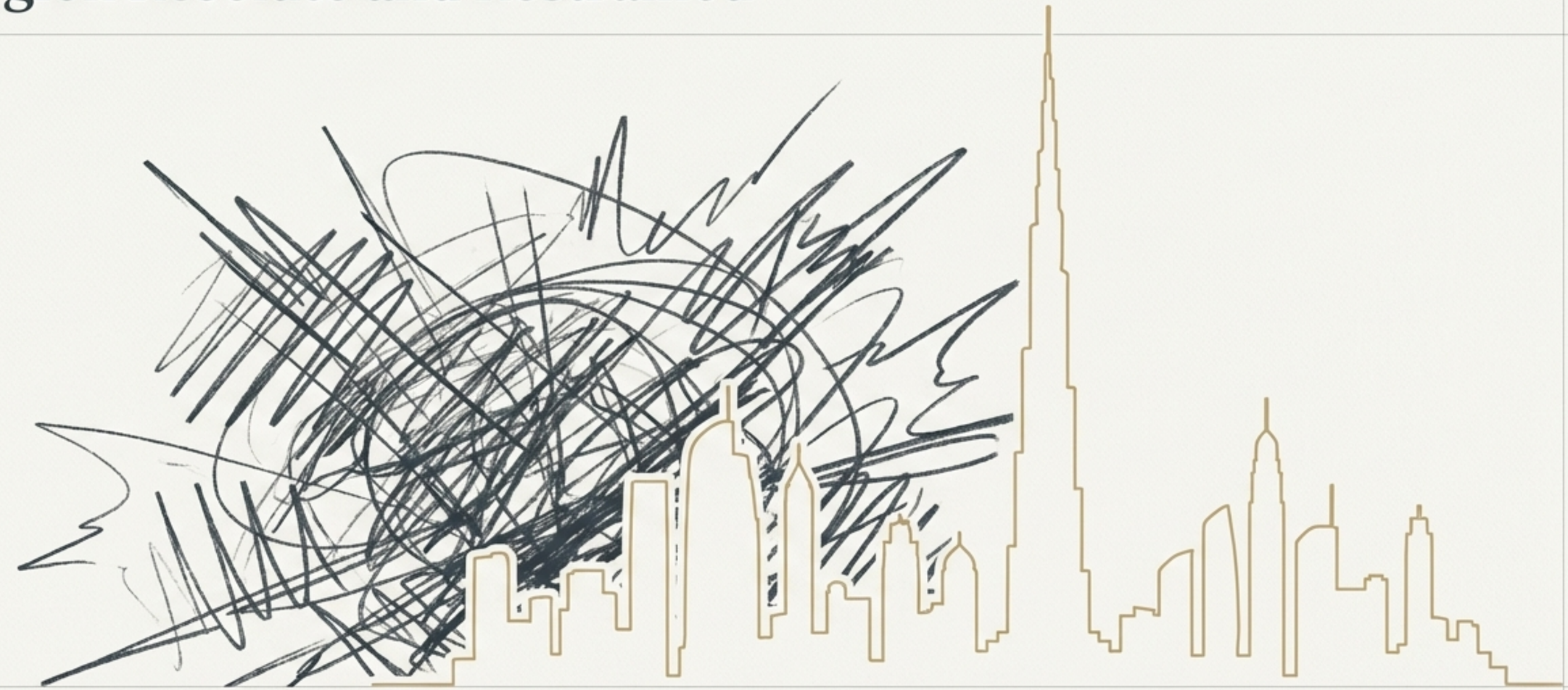

While Western politicians panic and scramble, the leaders of the Gulf have demonstrated impressive maturity. Through calm, deliberate defensive actions, places like Dubai have avoided chaos, allowing residents to carry on with their lives.

The new regional motto against the debris of unsanctioned war: "Keep Calm and Drink Karak."

NotebookLM

Playing With Extinction

Saudi Arabia has officially invoked its Pakistan Pact.

If this conflict widens to include Pakistan, the stakes fundamentally alter. This draws the only Muslim-majority country with nuclear weapons directly into the fray.

At this precipice, the world stops playing with fire and begins playing with extinction.

NotebookLM

The World is Not Poor, But Our Minds Are Bankrupt

War gaming must be played out in a virtual theater of words, not through bombardment.

A Karak chai around a table is infinitely cheaper than a $15 million missile, and no one has to go home to their family carrying a guilty conscience.

It is time to talk before the future ceases to be.

NotebookLM